SYNC ERGONOMICS
AEROBAR THREE TOP PLATE
CANYON SPEEDMAX CFR / CF SLX WITH CP0019

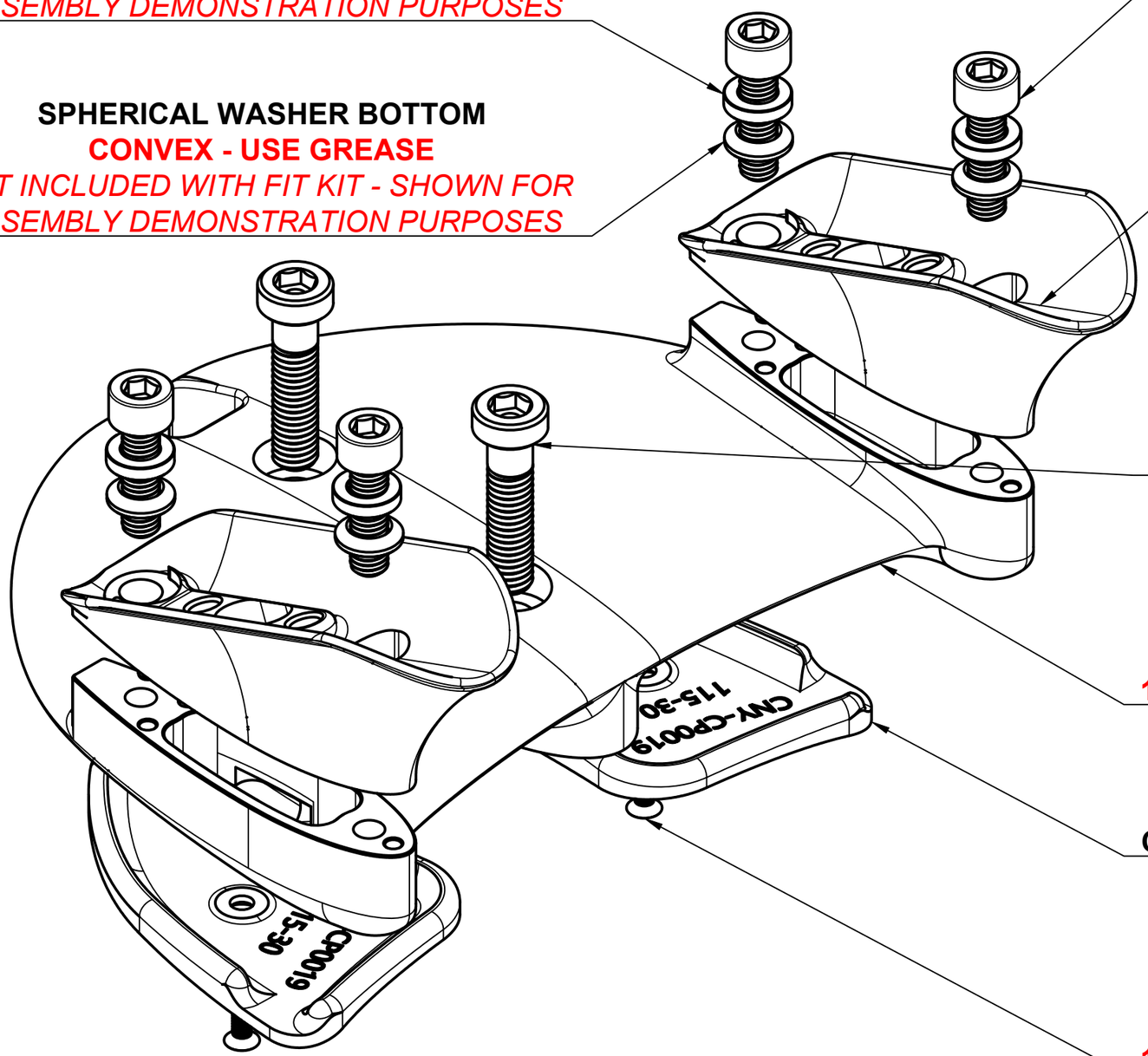

SPHERICAL WASHER TOP
CONCAVE - USE GREASE
NOT INCLUDED WITH FIT KIT - SHOWN FOR ASSEMBLY DEMONSTRATION PURPOSES

SPHERICAL WASHER BOTTOM
CONVEX - USE GREASE
NOT INCLUDED WITH FIT KIT - SHOWN FOR ASSEMBLY DEMONSTRATION PURPOSES

M5 X 18 MM SOCKET HEAD CAP SCREWS
5 NM TORQUE - USE GREASE
NOT INCLUDED WITH FIT KIT - SHOWN FOR ASSEMBLY DEMONSTRATION PURPOSES

AB03 EXTENSION CLAMP CRADLE
20 DEG, ANGLE ADJUSTABLE
NOT INCLUDED WITH FIT KIT - SHOWN FOR ASSEMBLY DEMONSTRATION PURPOSES

M6 X 20 MM AND M6 X 25 MM
USE WHEN CANYON CP0019 T-NUTS PENETRATE THE TOP PLATE

CANYON CP0019 TOP PLATE
115 MM WIDE X 30 MM OFFSET
135 MM WIDE OPTION AVAILABLE

CANYON CP0019 TOP PLATE COVERS

TOP PLATE COVER SCREWS
M3 X 6 MM TORX CSK
1 NM - USE PURPLE 222 LOCTITE